SATA III mSATA
Quasi-industrial SSD
Datasheet

Product interface

mSATA

capacity

256GB/512GB/1TB/2TB

function

1 MB sequential read speed: up to 530 MB/s (maximum typical value)

1 MB sequential write speed: up to 500 MB/s (maximum typical value)

4 K random read: up to 72K I/O operations per second (maximum typical value)

4 K random write: Maximum 17K I/O operations (maximum typical value)

power dissipation

operating power consumption: 2.50W (maximum typical value)

Static power consumption: 0.85W (maximum typical value)

Temperature

working range: -20℃ to +70℃

storage: -40℃ to +85℃

Dimension specifications (length*width，height/mm)

mSATA

(50.80±0.15)mm x (29.85±0.15)mm，≤4.85mm

Interface specifications and protocols

supports the SATA Revision 3.1 standard

supports SATA 6Gbps

Adaptive to SATA 3 Gbps and 1.5 Gbps

supports S.M.A.R.T features.

supports hot swapping

supports TRIM commands

reliability

Mean Time Between Failures (MTBF): 2.0 million hours

vibration compatibility

Non-working mode:3.13 Grms (5Hz ~800Hz)

Shock resistance

Non-working: 1500G,0.5ms, 3 axes

compatibility

supports Windows 7/8.1/10

supports mainstream Linux operating systems

supports Kylin/UOS/Zhongke Fangde/Tianmai/Yihui/Ruihua and other operating systems.

Domestic operating system

Company Statement

This specification shall be subject to all YOTTAWIN handbooks or terms of use provided or made available to the customer. This specification is subject to change and/or update without prior notice.

The customer assumes sole and exclusive responsibility for compliance with safety, environmental, export, trade, and other applicable laws and regulations with respect to this specification. In addition, the customer shall assume sole and exclusive responsibility for any embedded or other use of the devices described in this specification in nuclear or ultra-hazardous applications, as well as in applications that could cause property damage, bodily injury, or death. All specifications are subject to change without prior notice.

Safety Instructions for Use

For the safety of users, please read and follow all instructions, warning signs, precautions, and notes in this manual before using and operating the equipment.

- Carefully read these safety instructions;
- Save this manual for long-term reference;
- Read the chapter detailing the operating environment of this device;

To prevent damage to the equipment caused by overvoltage, overcurrent, etc. during operation:

- Ensure the use of voltage and power settings;
- Ensure the correctness of the interface signal access level;

Do not attempt to repair the equipment.

In the following cases, the equipment must be repaired by authorized personnel:

- The equipment is immersed in liquid;
- Being dropped, physically damaged or otherwise impaired;
- Sustains obvious physical damage.

Catalogue

1 Brief Introduction 1
2 Size Of Product 2
2.1 capacity 2
2.2 service behavior 2
2.3 electrical character 3
2.4 ambient condition 3
2.5 reliability 3
2.6 Durability 4
3 Mechanical information 5
4 Pin and Signal Description 6
5 Product Principle Flowchart 8
6 Command and Command Set 9
7 Model 11
8 Install 11
8.1 power supply mode 11
8.2 Unboxing inspection and precautions 11
8.3 Installation and Preparation 11
9 Maintenance and Care 11
10 Precautions and Requirements 12
10.1 transport 12
10.2 keep in storage 12

1 Brief Introduction

SATA III mSATA quasi-industrial solid-state drive features high transfer speed, excellent reliability, strong shock resistance and low latency. The electronic disk adopts the SATA III interface protocol, uses the standard mSATA form factor, and is equipped with high-performance NAND flash memory particles.

Main Functional Features

- Fully compatible with ATA/ATAPI-7 standards;
- Compatible with ATA/ATAPI-8 ACS4 mandatory commands;
- Supports local command queue (NCQ) command set;
- Supports dataset management commands;
- Supports end-to-end data protection;
- It adopts dynamic thermal protection technology and an intelligent overheating frequency reduction algorithm, which can automatically monitor and maintain a stable operating temperature. thereby further ensuring product performance.

2 Size Of Product

2.1 capacity

Table1 Capacity Correspondence

Physical Capacity	256GB	512GB	1TB	2TB
Available Capacity	238.47GB	476.94GB	953.87GB	1907.34GB

Note：

1. Due to the need to allocate part of the capacity for flash memory management and maintenance, the available capacity of SSDs will be smaller than their nominal capacity.

2.2 service behavior

Table2 Maximum Read and Write Performance

parameter	256GB	512GB	1TB	2TB	unit
Maximum sequential read performance of 1MB	520	526	530	530	MB/s
Maximum sequential write performance of 1MB	340	500	500	500	MB/s
Maximum random read performance of 4KB	38K	71K	74K	74K	KIOPS
Up to 4KB maximum random write performance	10K	16K	14K	14K	KIOPS

Note：

1.Performance data may deviate slightly due to differences in test tools and test environments.
2. 4KB =4096Bytes
3. 1Megabyte（MB）=1,000,000 Byte

Table3 IO response latency

Parameter	256GB	512GB	1TB	2TB	unit
4KB Read Latency(max)		130(Typ)			us
4KB Write Latency(max)		40(Typ)			us

Note：

1. The above latency measurements were obtained using sequential 4KB (4,096 bytes) IO operations with IOMeter configured at queue depth 1 and SSD write cache enabled. Variations in latency data may occur due to differences in testing tools and environments.

2.3 electrical character

Table4 Operating Voltage

Item	Range
Supply Voltage	3.3V±5%

Table5 Power Consumption

parameter	256GB	512GB	1TB	2TB	unit
Power consumption during write operation	1.65	2.15	2.35	2.50	W
idle power consumption	0.8	0.8	0.8	0.8	W

Note：

1. The operating power consumption is measured under the following conditions: 1 MB (1,048,576 bytes) IO operations, a queue depth of 1024, and sequential write operations on an empty SSD. The maximum average power consumption is collected from an external independent power supply during read operations.

2.4 ambient condition

Table6 Temperature

environmental parameter	Value	unit	Note
working Temperature	-20~+70	℃	
Storage Temperature	-40 ~ +85	℃	
Working humidity	5 ~ 95	%	
Storage humidity	95	%	non-coagulable

2.5 reliability

Table7 Reliability Specifications

Reliability parameter	Value	condition
UBER (Uncorrectable Bit Error Rate)	10^{-16}	/
MTBF (Mean Time Between Failures)	2.0 million hours	/
Data retention time after power outage	6 months	temperature ≤ 40℃

Note：

1. Refer to Table 1 in the JESD218 specification for UBER, FFR, and Workload values.

2.6 Durability

Table8 Tolerability specifications

Durability parameters	256GB	512GB	1TB	2TB	unit
TBW	256	512	1,024	2,048	TB
DWPD	1.0	1.0	1.0	1.0	times
Warranty period	3	3	3	3	year

Note：

1. The total write volume (TBW) and warranty period are determined by whichever comes first.

2. TBW: Total Written Data (Terabytes Written), the total amount of data written. (Refer to JESD219A specification for TBW write amplification testing value set at 3.5)

3 Mechanical information

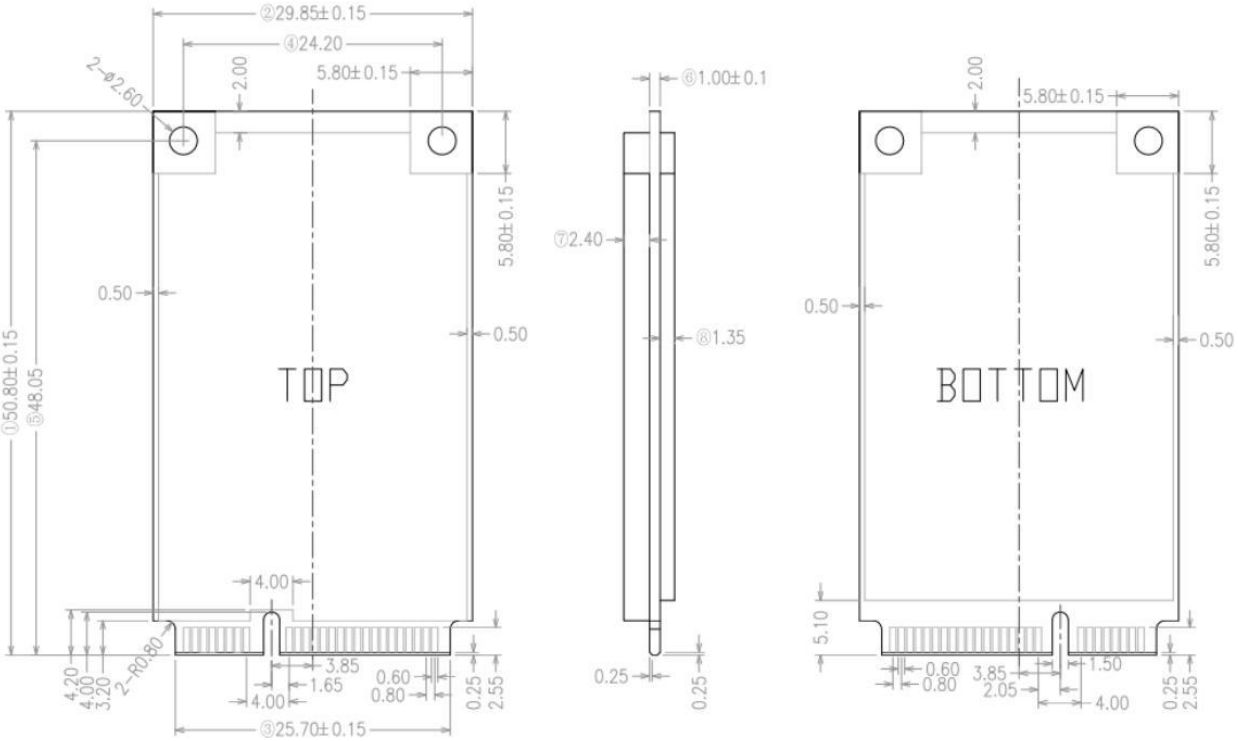

Figure 1 Dimension reference diagram (unit: mm)

Table9 Dimension Specifications

specifications	Length (mm)	wide (mm)	Thickness (mm)
mSATA	50.80± 0.15	29.85 ± 0.15	4.85(MAX)

4 Pin and Signal Description

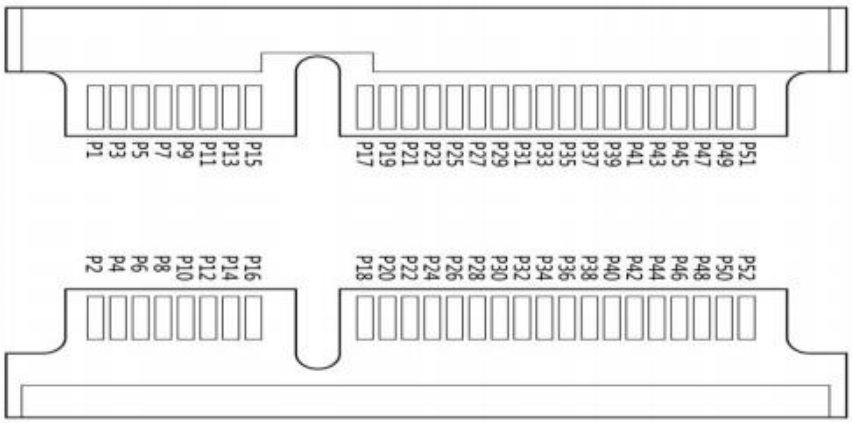

Figure2 SATA interface PIN pin diagram

Table10 mSATA SSD interface definition

explain	type	pin	pin	type	explain
No internal electrical connection exists	NC	1	2	+3.3 V	3.3 V power supply
No internal electrical connection exists	NC	3	4	GND	landing
No internal electrical connection exists	NC	5	6	+1.5 V	No internal electrical connection exists
No internal electrical connection exists	NC	7	8	NC	No internal electrical connection exists
landing	GND	9	10	NC	No internal electrical connection exists
No internal electrical connection exists	NC	11	12	NC	No internal electrical connection exists
No internal electrical connection exists	NC	13	14	NC	No internal electrical connection exists
landing	GND	15	16	NC	No internal electrical connection exists
No internal electrical connection exists	NC	17	18	GND	landing
No internal electrical connection exists	NC	19	20	NC	No internal electrical connection exists
landing	GND	21	22	NC	No internal electrical connection exists
Positive signal transmission terminal	SATA_TX+	23	24	+3.3 V	3.3 V power supply

Signal transmission negative terminal	SATA_TX-	25	26	GND	landing
landing	GND	27	28	+1.5 V	No internal electrical connection exists
landing	GND	29	30	Two wire interface	No internal electrical connection exists
Signal reception negative terminal	SATA_R-	31	32	Two wire interface	No internal electrical connection exists
Signal reception positive terminal	SATA_R+	33	34	GND	landing
landing	GND	35	36	NC	No internal electrical connection exists
landing	GND	37	38	NC	No internal electrical connection exists
3.3 V power supply	+3.3 V	39	40	GND	landing
3.3 V power supply	+3.3 V	41	42	NC	No internal electrical connection exists
The mSATA device internally connects to GND.	Device type	43	44	DEVSLP	Enter/Exit Deep Power Saving Mode
No internal electrical connection exists	Vendor	45	46	NC	No internal electrical connection exists
No internal electrical connection exists	Vendor	47	48	+1.5 V	No internal electrical connection exists
Device Activity Signal/Disable Interleaved Startup	DAS/DSS	49	50	GND	landing
Shall be pulled to GND by device	Presence Detection	51	52	+3.3 V	3.3 V power supply

5 Product Principle Flowchart

The primary function of an mSATA solid-state drive is to fulfill users' data storage and retrieval requirements. The main controller communicates with the host port via the SATA III interface, parsing valid data through the SATA III protocol and link verification before distributing it to the flash memory chip array for storage management. The internal architecture of an mSATA SSD is illustrated in the diagram below.

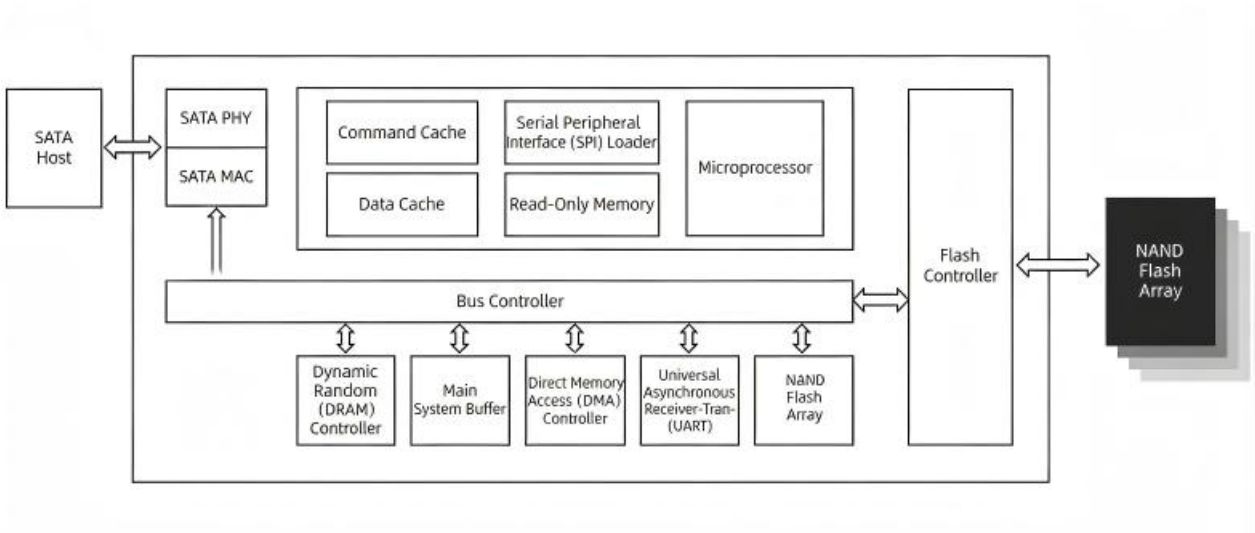

Figure 3 Block diagram of SSD control board product principle

6 Command and Command Set

Table11 Supported ATA command list

command name	Command code (hexadecimal)	command name	Command code (hexadecimal)
CHECK POWER MODE	E5h / 98h	DEVICE CONFIGURATION	B1h
DOWNLOAD MICROCODE	92h	DOWNLOAD MICROCODE DMA	93h
EXECUTE DEVICE DIAGNOSTIC	90h	FLUSH CACHE	E7h
FLUSH CACHE EXT	EAh	IDENTIFY DEVICE	ECh
IDLE	E3h / 97h	IDLE IMMEDIATE	E1h / 95h
INITIALIZE DEVICE PARAMETERS	91h	READ BUFFER E	4h
READ BUFFER DMA	E9h	READ DMA	C8h
READ DMA (w/o retry)	C9h	READ DMA EXT	25h
READ FPDMA QUEUED	60h	READ LOG DMA EXT	47h
READ LOG EXT	2Fh	READ MULTIPLE	C4h
READ MULTIPLE EXT	29h	READ NATIVE MAX ADDRESS	F8h
READ NATIVE MAX ADDRESS EXT	27h	READ SECTORS	20h
READ SECTORS (w/o retry)	21h	READ SECTORS EXT	24h
READ VERIFY SECTORS	40h	READ VERIFY SECTORS (w/o retry)	41h
READ VERIFY SECTORS EXT	42h	RECALIBRATE	10h
NCQ NONDATA	63h	SANITIZE DEVICE	B4h
SECURITY DISABLE PASSWORD	F6h	SECURITY ERASE PREPARE	F3h
SECURITY ERASE UNIT	F4h	SECURITY FREEZE LOCK	F5h

command name	Command code (hexadecimal)	command name	Command code (hexadecimal)
SECURITY SET PASSWORD	F1h	SECURITY UNLOCK	F2h
SEND FPDMA QUEUED	64h	SET DATE N TIME	77h
SET FEATURES	EFh	SET MAX ADDRESS	F9h
SET MAX ADDRESS EXT	37h	SET MULTIPLE MODE	C6h
SLEEP	E6h / 99h	S.M.A.R.T.	B0h
STANDBY	E2h / 96h	STANDBY IMMEDIATE	E0h / 94h
TRIM	06h	WRITE BUFFER	E8h
WRITE BUFFER DMA	EBh	WRITE DMA	CAh
WRITE DMA (w/o retry)	CBh	WRITE DMA EXT	35h
WRITE DMA FUA EXT	3Dh	WRITE FPDMA QUEUED	61h
WRITE LOG DMA EXT	57h	WRITE LOG EXT	3Fh
WRITE MULTIPLE	C5h	WRITE MULTIPLE EXT	39h
WRITE MULTIPLE FUA EXT	CEh	WRITE SECTORS	30h
WRITE SECTORS (w/o retry)	31h	WRITE SECTORS EXT	34h
WRITE UNCORRECTABLE EXT	45h		

7 Model

Table12 Product Model Table without Secure Erase

Product Parameter	model	capacity
mSATA	HESAMS256G55-NFT3WB	256GB
	HESAMS512G55-NFT3WB	512GB
	HESAMS001T55-NFT3WB	1TB
	HESAMS002T55-NFT3WB	2TB

8 Install

8.1 power supply mode

The operating voltage of the SSD control board is DC (3.3±5%) V.

8.2 Unboxing inspection and precautions

a) Before opening the box, inspect whether the product packaging is intact and check for any signs of compression or damage.

b) After implementing static electricity protection measures, the anti-static bag may be opened to remove the product. Upon removal, visually inspect the product's appearance to ensure it remains intact.

8.3 Installation and Preparation

a) After implementing electrostatic protection measures, remove the product from the electrostatic protective bag.

b) Check if the environment is functioning properly;

c) Check whether the signal and power connectors are functioning properly.

9 Maintenance and Care

Maintenance and servicing of the SSD control board shall be conducted every two years, and the SSD must be powered off during maintenance. Maintenance contents include:

a) Inspect for physical integrity; wipe the connector with alcohol.

b) Check for any looseness in connectors and fasteners. If loosening is detected, reinforce them promptly.

10 Precautions and Requirements

10.1 transport

a) Packaged products can be transported by conventional means of transportation. During transportation, appropriate measures should be taken to protect against rain and snow.

b) Concomitant transportation with corrosive substances such as acids and alkalis is prohibited;

c) Do not stack heavy objects on top of products;

d) Handle with care during transportation.

10.2 keep in storage

The product is recommended to be stored in a dedicated warehouse with a Temperature range of 0℃ to 35℃, relative humidity not exceeding 80%, and free from strong magnetic fields. The product must not be stored together with acids, alkalis, or corrosive substances.